PUBLISHED: 26-OCT-2017
2022.0 DEFENDER (LE), 307-01

AUTOMATIC TRANSMISSION/TRANSAXLE - VEHICLES WITH: 8HP70 8-SPEED AUTOMATIC TRANSMISSION AWD

EXTENSION HOUSING SEAL (G1976218)

REMOVAL AND INSTALLATION

44.20.21	OIL SEAL - OUTPUT SHAFT - RENEW	3000 CC, TDV6, SINGLE SPEED TRANSFER CASE, WITH PARTICULATE FILTER, WITH DIESEL EXHAUST FLUID	5	USED WITHINS	
44.20.21	OIL SEAL - OUTPUT SHAFT - RENEW	3000 CC, TDV6, SINGLE SPEED TRANSFER CASE, WITH PARTICULATE FILTER, WITHOUT DIESEL EXHAUST FLUID	4	USED WITHINS	
44.20.21	OIL SEAL - OUTPUT SHAFT - RENEW	3000 CC, TDV6, TWIN SPEED TRANSFER CASE, WITH PARTICULATE FILTER, WITH DIESEL EXHAUST FLUID	4.7	USED WITHINS	

transmissionmanuals.com

44.20.21	OIL SEAL - OUTPUT SHAFT - RENEW	3000 CC, TDV6, TWIN SPEED TRANSFER CASE, WITH PARTICULATE FILTER, WITHOUT DIESEL EXHAUST FLUID	4	USED WITHINS	

SPECIAL TOOL(S)



100-012

Slide Hammer



100-012-01

Slide Hammer Adapter

transmissionmanuals.com



307-520

Installer, Output Shaft Seal

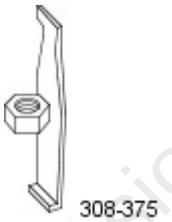

308-375

Remover, Input and Output Seal



JLR-307-520-01

Adapter, Output Shaft Seal

transmissionmanuals.com

REMOVAL

NOTE:

- This procedure contains some variation in the illustrations depending on the vehicle specification, but the essential information is always correct.
- This procedure contains illustrations showing certain components removed to provide extra clarity.

transmissionmanuals.com

1. Raise and support the vehicle on a suitable 2 post lift.
Refer to: Jacking and Lifting (100-02, Description and Operation).

2. Disconnect the startup battery ground cable.
Refer to: Specifications (414-00, Specifications).

3. Remove transfer case.
Refer to: Transfer Case - V6 S/C 3.0L Petrol (315-00A, Removal).
Refer to: Transfer Case - INGENIUM I4 2.0L Diesel (315-00A, Removal).
Refer to: Transfer Case - INGENIUM I4 2.0L Petrol (315-00A, Removal).

4. **CAUTION:**

Care must be taken to avoid damage to the seal register and running surface.

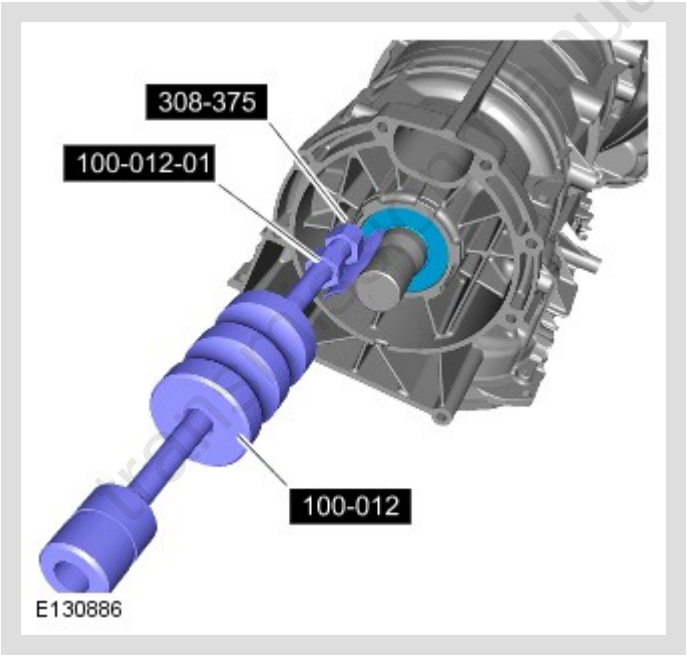

Using the special tools remove the extension housing seal.
Special Tool(s): 100-012 , 100-012-01 , 308-375

INSTALLATION

1.

CAUTION:

Oil seals must be installed dry.

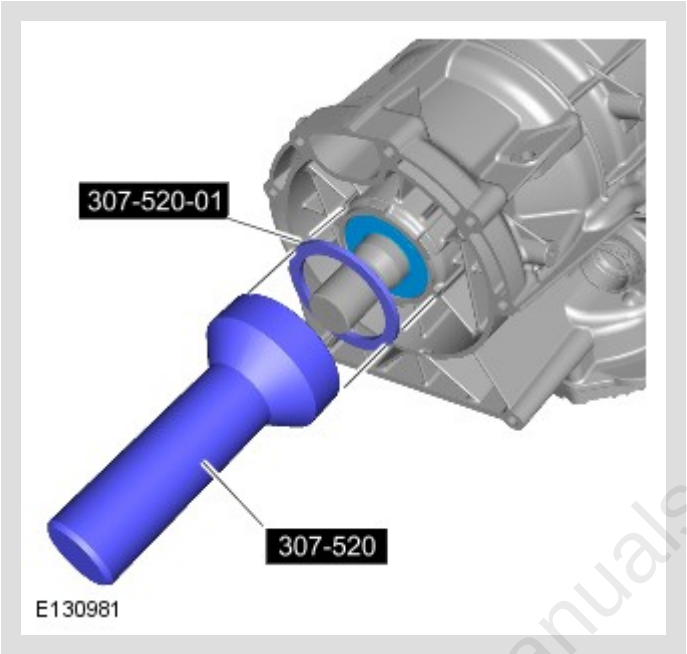

Using the special tools install a new extension housing seal.
Special Tool(s): 307-520 , JLR-307-520-01

2. Install the transfer case.
Refer to: Transfer Case - V6 S/C 3.0L Petrol (315-00A, Installation).
Refer to: Transfer Case - INGENIUM I4 2.0L Diesel (315-00A, Installation).
Refer to: Transfer Case - INGENIUM I4 2.0L Petrol (315-00A, Installation).

3. Check the transmission fluid level.
Refer to: Specifications (315-00A, Specifications).

4. Connect the startup battery ground cable.
Refer to: Specifications (414-00, Specifications).

transmissionmanuals.com